Evaporative Cooling Humidifier

SKV Series

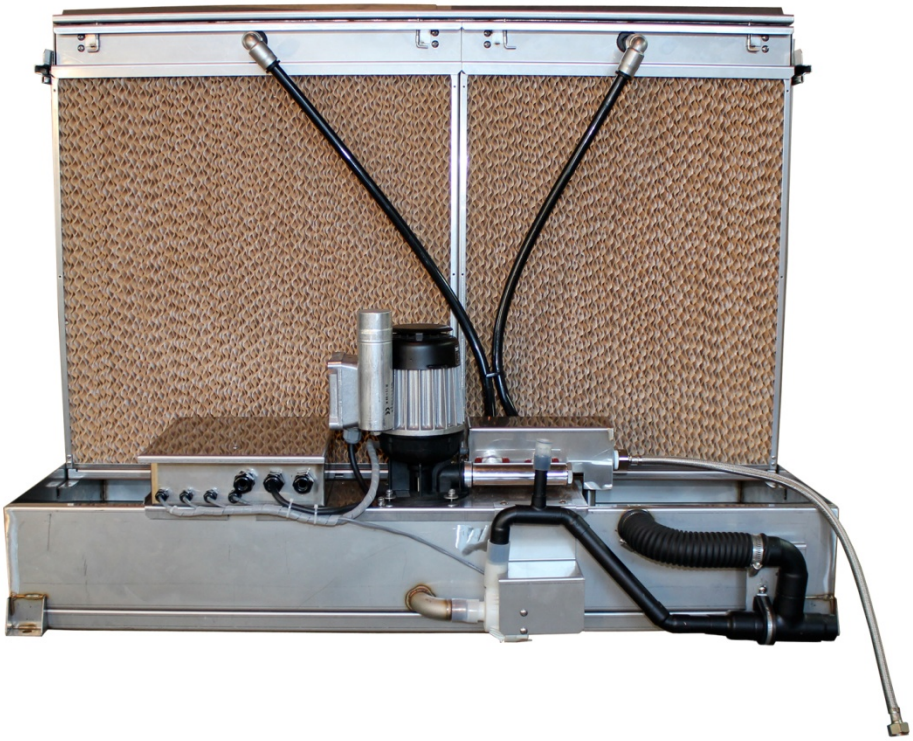

Installation Instructions and User Manual

Read and save this manual

Foreword

Neptronic Company Overview

Founded in 1976, we're a private corporation that designs, manufactures and distributes products for the HVAC industry. Our product line includes intelligent controllers, electronic actuators, actuated valves, humidifiers and electric heaters.

Our products are designed and manufactured by over 250 dedicated employees in our 7,500 m^2 (80,000 ft^2) state-of-the-art facility located in Montreal, Canada. Using a vertical integration model, our entire manufacturing chain is under one roof from software and hardware development, to SMT circuit board assembly, to sheet metal fabrication, to product testing ensuring that our products are engineered to last.

We currently hold several national and international patents and with our continued commitment to research and development, we provide innovative products and technologies for the ever-evolving challenges of the HVAC industry. Exporting over 70% of our sales, we have an exclusive distribution network around the globe that provides comprehensive solutions to our worldwide customers.

About the Manual

These installation and operation instructions have been developed to facilitate the installation of the Evaporative Cooling Humidifier.

- The strict application of these instructions will ensure conformity of your installation and operation as per the manufacturer's recommendations.
- The application of these instructions is one of the conditions for the application of the warranty.
- The application of these instructions does not ensure, at any time conformity to procedures, regulation or local codes, regarding electric installation and connection to local water supply.

2014©: All rights reserved. This document cannot be reproduced totally or partially by any means whether, electronic, mechanical, photocopy, recording or other, without prior written authorization of Neptronic.

Health and Safety Instructions

General

This manual has been written to ensure correct, safe and sustainable operation of the SKV Evaporative cooling humidifier and is intended for use by engineers and technical personnel trained by Neptronic or their official agents. This manual must be read thoroughly before specifying, designing, installing or operating an SKV Evaporative Cooling Humidifier. Please retain for reference and should you have any questions please contact Neptronic and we will be pleased to assist.

The triangular symbol with the word **WARNING**: is used to designate danger of severe or lethal consequence.

The circular symbol with the word **CAUTION**: is used to designate danger of injury, or to warn of hazardous operating condition.

Electrical Warning Message

WARNING:

Risk of electric shock. Do not access. Disconnect Evaporative Cooling Humidifier prior to opening the access door.

All work concerned with electrical installation MUST only be performed by skilled and qualified technical personnel such as an electrician or a technician with appropriate training. The customer is always responsible for ensuring the suitability of the technical personnel.

Please observe local regulations concerning the provision of electrical installations.

Health & Safety

Installation, maintenance, repair work or de-commissioning should only be carried out by appropriately qualified and properly trained technical personnel. Any risks or hazards relating to the system, including during installation and maintenance, should be identified by a competent Health & Safety representative who shall be responsible for introducing effective control measures as necessary. The customer is responsible for ensuring that the installation of the equipment complies with all local regulations.

CAUTION: Maintenance personnel must be trained by Neptronic or their official agent and it is the customer's responsibility to ensure their suitability. Failure to use properly trained personnel may lead to a hazardous operating condition.

WARNING: Danger of electrocution! Danger of contact with live parts when the unit is open. Always isolate all water and electrical supplies to the system before commencing any maintenance or repair. Isolate power and water immediately if there is any sign of water leaking from the unit.

Protective Equipment

Please refer to the Health and Safety Executive for recommendations with regard to Personal Protective Equipment and for information on the Control of Substances Hazardous to Health COSHH.

Hygiene

IMPORTANT:

Refer to local Health and Safety regulation and codes on the control of Legionellosis in water systems. In the absence of such, ASHREA guideline 12-2000 does provide recommendations.
If not adequately maintained, water systems can support the growth of micro-organisms including the bacterium that causes Legionnaires' disease.

SKV has been designed to reduce as much as possible any possible risk of legionellosis growth. Users also share the responsibility in reducing the risk of legionellosis; users are required to:

- Conduct a risk assessment of the complete water system.
- Implement proper control of the water system.
- Connect SKV to a clean and chlorinated water supply main.
- Avoid stagnant water.
- Avoid water temperatures that increase risk of Legionella growth.
- Clean and disinfect the system regularly, refer to service section of the present Installation Instructions and User Manual.

WARNING: Risk of Legionnaires' disease which can be fatal. SKV Evaporative Cooling Humidifier must be installed, operated and serviced in accordance with this Installation Instructions and User Manual.

WARNING: In the event that the SKV Evaporative Cooling Humidifier is turned off for prolonged periods (more than 24 hours), ensure that any water storage tanks and pipe-work supplying the unit are drained, unless they supply other systems which ensure a regular renewal of water in the system. Failure to do so may result in stagnation of the water and contamination that might cause Legionnaires' disease, which can be fatal.

It is the responsibility of the person on whom the statutory responsibility falls to determine all control and preventative measures outlined in this manual.

Correct Use

Neptronic systems and its products are designed only for humidification use. Any other application is not considered appropriate for the intended purpose. The manufacturer cannot be made liable for any damage resulting from incorrect use.

Lists and Table of Contents

Contents

Overview 1
Operation 1
Benefits 2
Features 2
Nomenclature 2
Specifications 3
Dimensions and Weights 3
Handling and Packaging 4
Handling 4
Correct Lifting Method 4
Inspection 4
Unpacking 4
Installation Overview 5
Local Regulations 5
List of Supplied Accessories 5
Installation Method Statement 6
Stage 1 – On Site Assembly of Evaporation Module 7
Stage 2 – Evaporation Module Positioning and Mounting 9
General Considerations 9
Positioning the Evaporation Module 9
Stage 3 – Water Supply Installation 10
Stage 4 – Drain and Overflow Connections 11
Stage 5 – Power Supply Connections 12
Stage 6 – Electrical Control Connections 13
Safety Contact Connections 13
On/Off Operation 14
Modulating Operation 14
Mounting of the Enclosure 14
Stage 7 – SKV Controller Installation and Configuration 15
Menu Overview 15
Main Menu Configuration 16
Main Menu - Controls 17
Main Menu - System Setup 18
Main Menu - Diagnostics 19
Main Menu - Installer 21
Firmware Update 22
Alarms 23
Servicing and Maintenance 24
Preventative Maintenance 24
Verification List 24
Water Sampling and Testing (Hygiene) 24
Disinfection 25
De-scaling 26

Troubleshooting 28
Water leakage from the tank 28
Water carries over into air stream 28
Loss of performance 28
Scale build up on the surface of the media 28
Module pump is not functioning 28
Exploded View and Parts List 29
Evaporative Cooling Humidifier 29
Media Panels 30
Recommended Spares List 30
General Conditions of Sale and Warranty 31
General warranty policy 31
Special agreement on components under warranty 31
Notes 32

List of Illustrations

Illustration 1- Evaporative Media 1
Illustration 2 - Humidifier Overview 1
Illustration 3 - Dimensions and Weights 3
Illustration 4 - Installation Stages 6
Illustration 5 - Evaporation Module Assembly 7
Illustration 6 - Positioning and Mounting 9
Illustration 7 - Water Supply Installation 10
Illustration 8 - Drain and Overflow Connections 11
Illustration 9 - Power Supply Connections 12
Illustration 10 - SKV Controller Wiring Diagram 13
Illustration 11 - Mounting the Controller Enclosure 14
Illustration 12 - Evaporative Cooling Humidifier Exploded View 29

List of Tables

Table 1 - Nomenclature 2
Table 2 - Water Supply and Drain Connection Specifications 3
Table 3 - Evaporation Module Specifications 3
Table 4 - P Trap Installation 11
Table 5 - Water Drain and Overflow Specifications 11
Table 6 - Power Supply Specifications 12
Table 7 - Passwords 16
Table 8 - Water Dilution (determine interval and number of cycles) 22
Table 9 - Proposed plan of control and disinfection according to results of microbiological testing of water 25
Table 10 - Evaporative Cooling Humidifier Part Numbers 29
Table 12 - Media Panel Numbers 30
Table 13 - Spare Parts Replacement 30

Overview

Operation

The humidifier consists of an Evaporative Module that is installed in an air handling unit (AHU) or a duct. Water enters the evaporation module from the main water supply and reaches the top of the unit. The water distribution system disperses water over the Evaporative Module like a waterfall. Warm dry air passes through the wet media, evaporates water, and raises the humidity level. The SKV also offers up to 21.5°F (12°C) of cooling as a result of the transfer of energy when the water evaporates.

In order to prevent any possible carry over, an optional droplet separator can be added at any time during the life of the SKV. Neptronic does recommend the use of droplet separator when air velocity is above 600FPM (3m/sec).

Any particle or contamination present in the air flow can accumulate and clog the media. For this reason, Neptronic recommends proper air filtration, typically and at least 5 microns (EU5). On some critical applications, such as medical sites or laboratories, a finer filtration might be required.

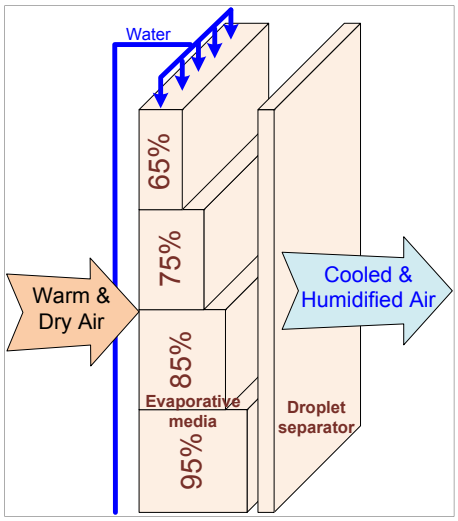

Illustration 1- Evaporative Media

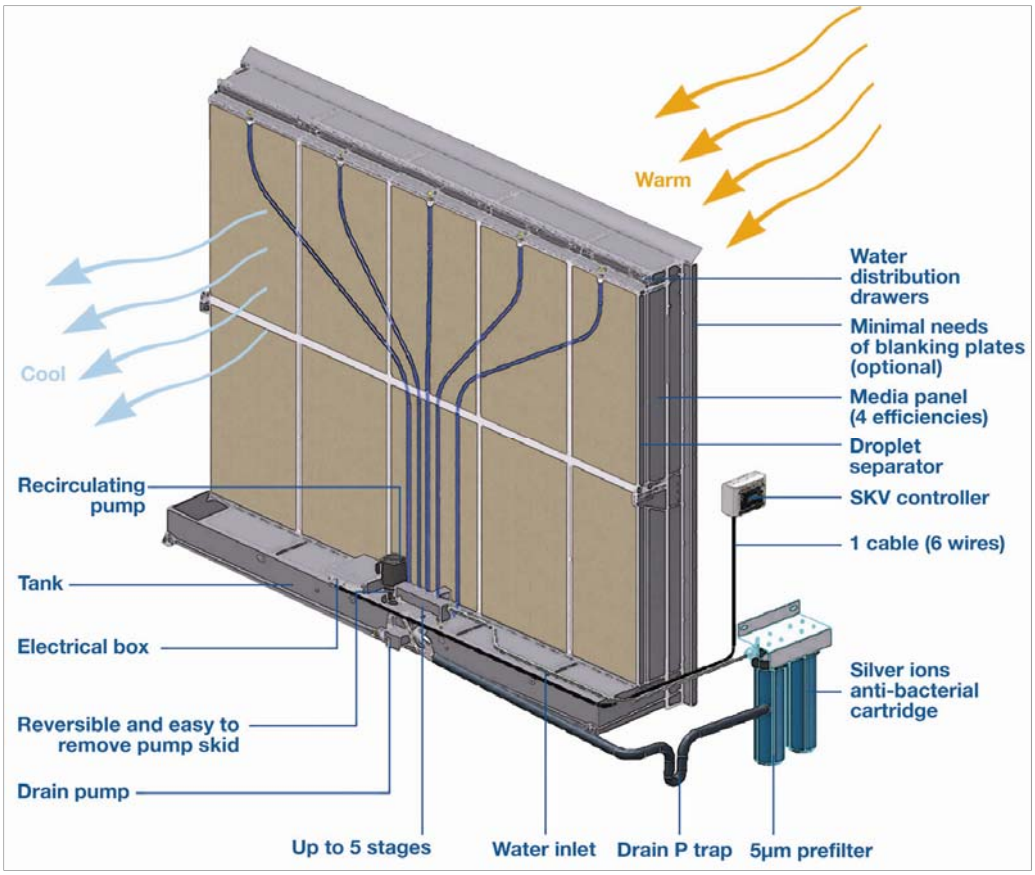

Illustration 2 - Humidifier Overview

Benefits

- Very low energy consumption (< 1kW)
- Free cooling up to 21.5°F (12°C)
- Hygienic operation
- Custom modular design to fit exact dimensions of AHU or duct ensures minimal use of blanking plates, which obstruct air passage and increase pressure drop through the evaporation module
- Environmentally friendly
- Low pressure drop
- Simple and low maintenance. Easy access to water distribution on top, no tools required to remove media panels, one screw to remove pump skid
- Fast and efficient drain pump with the ability to lift the drain water when no slope is possible for the drain water pipe
- All parts in contact with water are made of stainless steel and designed for life
- Uses any type of water, Deionised (DI), Reverse Osmosis (RO) or tap water

Features

- Custom designed with Humidisoft to meet your specific duct/application dimensions
- Energy transfer during water evaporation results in free cooling up to 21.5°F (12°C)
- Low energy (< 1 kW) consumption ensuring an environmentally friendly application
- Four humidification efficiencies: 65%, 75%, 85% and 95%
- Inorganic and inflammable material (UL900 Class 1)
- Minimum blanking plates resulting in lower pressure drop
- 5 microns PP pre-filter and silver ion dosing cartridges prevent microbial growth
- Staging valves: up to 5 for flexible and accurate control
- Includes SKV electronic controller
    - Microprocessor based, field configurable controller
    - BACnet communication (optional)
    - On/Off or modulating control type
    - Master/slave configuration for up to 4 Evaporative Modules
    - Easy connection with only one 6-wire control cable
    - User-friendly, menu-driven LCD (128 x 64)
    - Real-time clock and SD card for scheduler, trending and history log
    - Firmware upgrade via SD card
    - Stainless steel controller enclosure rated IP56 for outdoor installations

Nomenclature

Table 1 - Nomenclature

SKV	R	95	C	1	D	C
	Type: **R** = Recirculation **D** = Direct Feed **O** = OEM	Media Efficiency: **65** = 65% efficiency **75** = 75% efficiency **85** = 85% efficiency **95** = 95% efficiency	Controller: **C** = Standard Controller **B** = BACnet Controller **_** = None	No. of Stages: **1** = 1 Stage **2** = 2 Stages **3** = 3 Stages **4** = 4 Stages **5** = 5 Stages	Droplet: **D** = Droplet separator **_** = Not included	Voltage: **A** = 120Vac **C** = 230Vac

Specifications

Table 2 - Water Supply and Drain Connection Specifications

Specification	Description
Water Supply Size	Ø3/4'' (20mm) garden hose, male
Maximum Water Supply Pressure	70 PSI (4.8bar)
Maximum Water Supply Temperature	68°F (20°C)
Drain Pump Inlet Size	Ø3/4" (20mm)
Overflow Outlet Size	Tank size less than 94" (239cm): Ø1.5" (3.8cm) Tank size greater than 94" (239cm): Ø2.0" (5.1cm)

Table 3 - Evaporation Module Specifications

Specification	Description
Evaporation Module Frame Material	Stainless Steel Grade 304
Evaporation Media – Material	Glass fibre material bonded with a special inorganic compound
Evaporation Media – Fire Rating	European Fire rating: (EN13501-1 & EN13238): Euro class A2, s2, d0 North America Fire rating: UL900 class 1 (by ETL)
Evaporation Media – Hygiene Evaluation	EN ISO 846, VDI6022 Part I, suitable for use in HVAC-systems (by ILH Berlin)

Dimensions and Weights

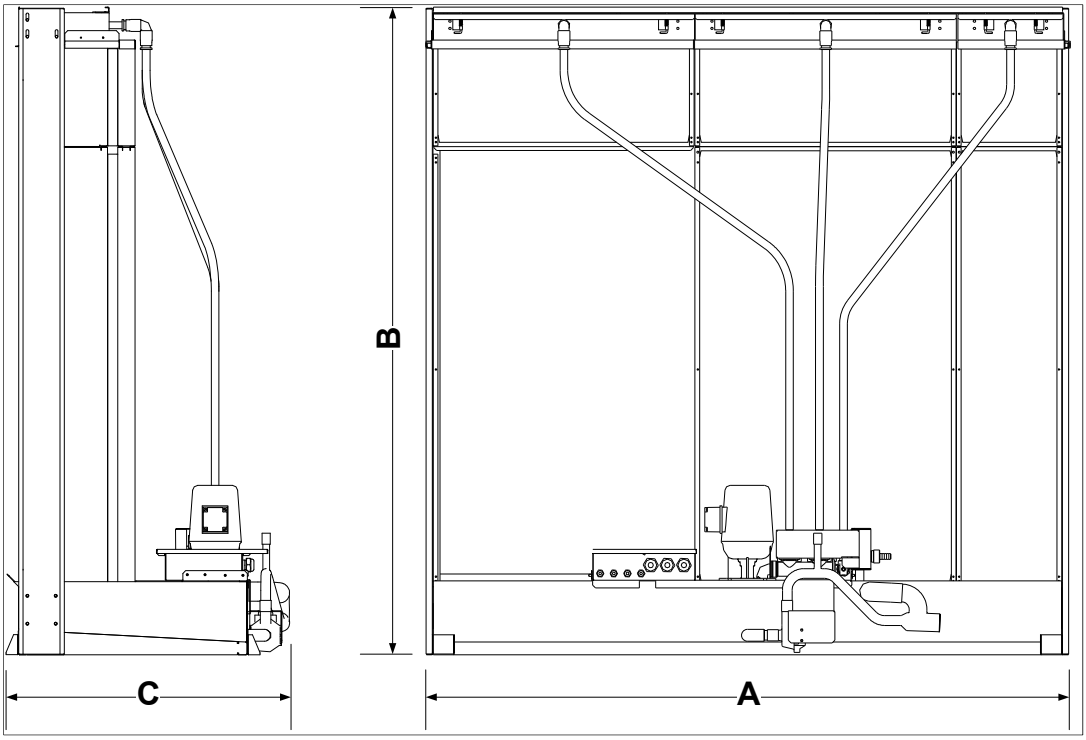

Illustration 3 - Dimensions and Weights

Evaporative Module dimensions are calculated and customized to the actual size of the duct dimension using Humidisoft. Please refer to drawing attached and referenced with the Humidisoft project number for dimensions and weights for your SKV.

Handling and Packaging

Handling

Always handle the SKV Evaporative Cooling Humidifier with care and keep within its original packaging for as long as possible, prior to installation. It must be stored under cover and protected from any possible damage, from dust, rain or frost.

Correct Lifting Method

Lifting or handling must only be carried out by trained and qualified personnel. Ensure that the lifting operation has been properly planned, risk assessed and that all equipment has been checked by a skilled and competent Health & Safety representative and that effective control measures are put in place.

WARNING. It is the customer's responsibility to ensure that operators are trained in handling heavy goods and to enforce the relevant lifting regulations.

WARNING. Any personnel handling or lifting the SKV Evaporative Cooling Humidifier must follow the Lifting Operations and Lifting Equipment Regulations 1998 and Approved Code of Practice L113. The regulation imposes duties on employers and self employed persons and persons who have control, to any extent of lifting equipment.

Refer to dimensions and weights as indicated on the SKV nameplate as well as the submittal drawing for system dry weights.

Inspection

Upon receipt, and once packaging material has been removed, an inspection must be carried out to ensure that no damage occurred during transit. Any damage should be reported with no delay to your Neptronic representative.

Unpacking

Upon customer request and following transit maximum size for large dimension SKV Evaporative Cooling Humidifier, evaporation media panels and evaporation module frames are delivered on a separate pallet. In this case, the evaporation module will have to be assembled on site.

CAUTION. Risk of malfunction, evaporation media should not be cut or crushed during handling and installation.

Installation Overview

WARNING: Failure to observe manufacturer's installation recommendations will invalidate the manufacturer's warranty.

Local Regulations

Lifting or handling MUST be carried out by trained and qualified personnel. Ensure that the lifting operation has been properly planned, assessed for risk and that the equipment has been checked by a competent Health & Safety representative, and that effective control measures are in place.

It is the customer's responsibility to ensure that the operators are trained in handling heavy goods and to enforce the relevant lifting regulations.

The Evaporative Cooling Humidifier MUST always be handled and lifted with care and should remain in its original packaging for as long as possible prior to installation.

The Evaporative Cooling Humidifier package may be carried using a forklift from the underside. Caution should be exercised to ensure a balanced load before lifting.

List of Supplied Accessories

- Water supply stainless steel reinforced hose 24" (600mm) along with 1/2'' NPT (13mm) female hose connection.
- Water filter assembly, 5 microns PP pre-filter and silver ion dosing anti bacterial cartridges.
- Installation Instructions and User Manual

Installation Method Statement

Stage 1 – On Site Assembly of Evaporation Module
Stage 2 – Evaporation Module Positioning and Mounting
Stage 3 – Water Supply Installation
Stage 4 – Drain and Overflow Connections
Stage 5 – Power Supply Connections
Stage 6 – Electrical Control Connections
Stage 7 – SKV Controller Installation and Configuration

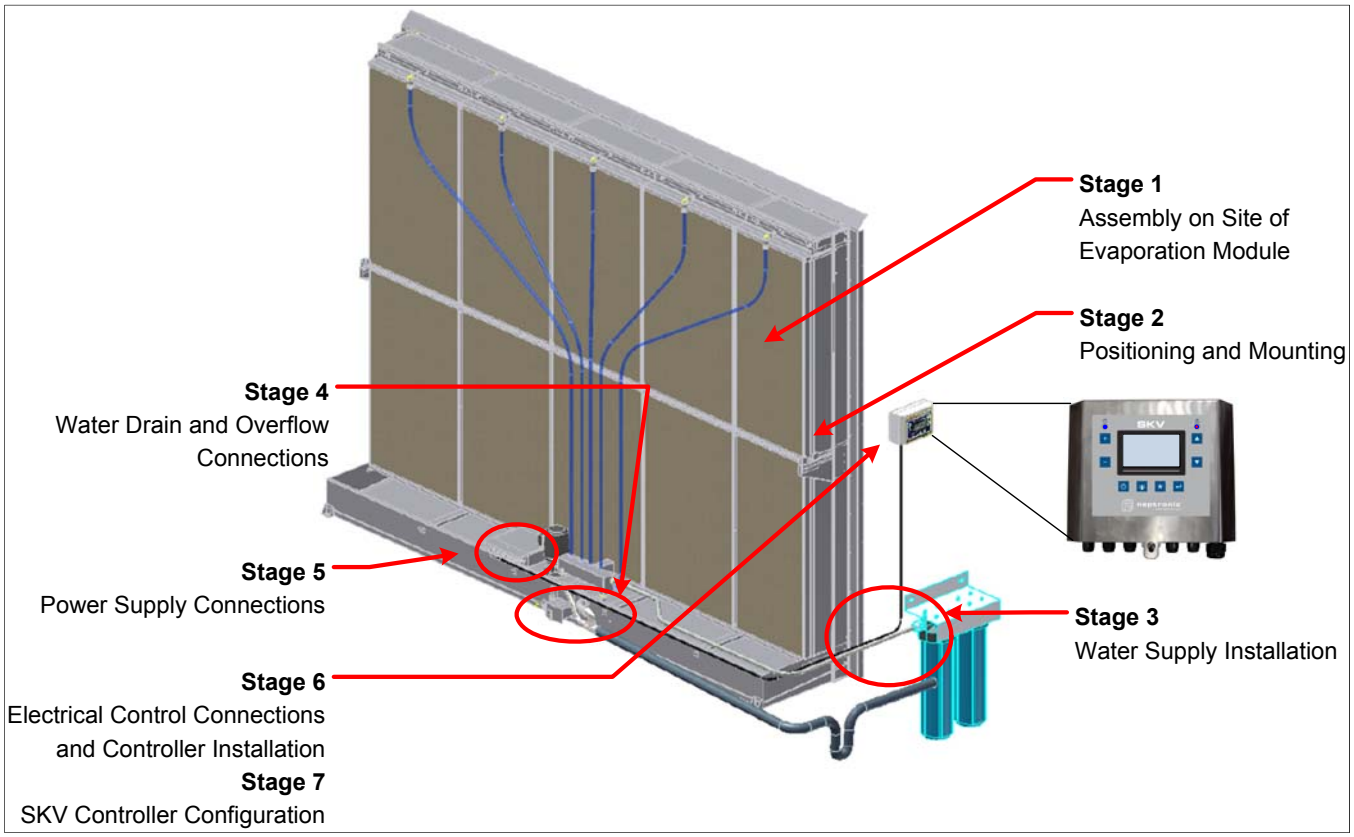

Illustration 4 - Installation Stages

Stage 1 – On Site Assembly of Evaporation Module

On site assembly of the SKV evaporation module is necessary when its height and width are incompatible with maximum shipping dimensions.

CAUTION. Risk of injury. Some sheet metal parts might present sharp edges and some handling and assembly will require working with a ladder. We recommend wearing protective gloves and any appropriate other protective equipment during handling and assembly of the SKV evaporation module.

We recommended installing the SKV evaporation module into a waterproof AHU or duct section. The SKV evaporation module is a self-contained humidifier/cooler however; leaks might occur at the water and drain connection point.

WARNING: Risk of malfunction. SKV evaporation module must be level in the 2 plan directions.

Bottom tank, main support beam and pump skid will usually be pre-assembled at the factory before delivery. However, the main support beam for the evaporative media panels as well as the pump skid can be easily removed and re-installed as indicated in steps 1 and 9. Tools required:

- Philips screw driver size #2 & #3
- Wrench sizes 7/16'' (11mm) and 5/16'' (8mm)
- Level

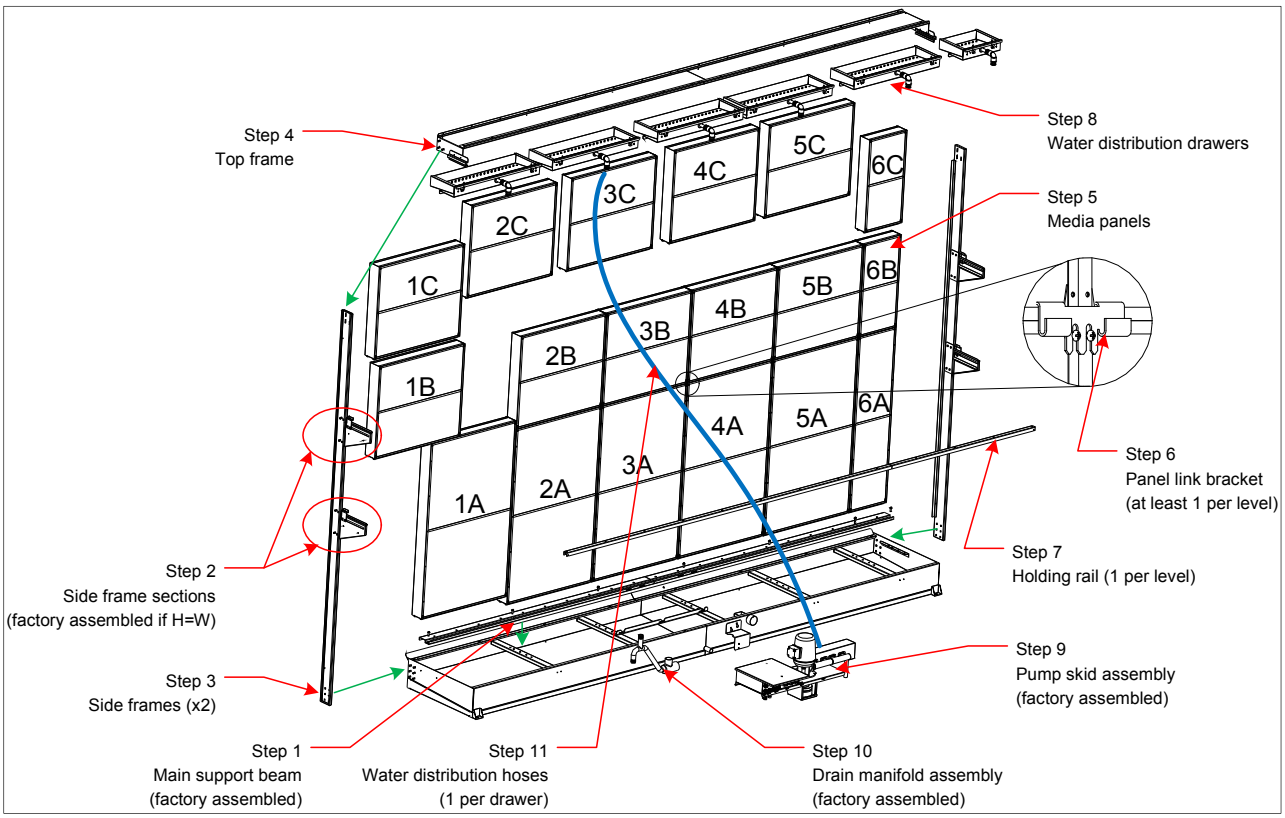

Illustration 5 - Evaporation Module Assembly

Step 1 (optional): Main Support Beam

The evaporation media panel's main support beam is assembled at the factory. However its position can be adjusted depending on the evaporative media panels' depth. To do so, remove the screws' protective caps and remove the Philips screws. Adjust, re-install the screws and re-insert the protective caps.

Step 2 (optional): Side Frame Sections

If the height of the evaporation module is greater than its width, assemble the side frame section along with the holding rail support. Install the four lock washers and nuts and then tighten using a 7/16'' (11mm) wrench.

Step 3: Side Frames

Assemble the two side frames onto the bottom tank. Install the six lock washers and nuts on each side and then tighten using a 7/16'' (11mm) wrench.

Step 4: Top Frame

Install the top frame onto the two side frames.

CAUTION. This part can be very long and might require the help of 2 people to be safely installed.

Install the three lock washers and nuts on each side. Do not tighten the nuts, as a final adjustment of the assembly will be required after all the media panels and water distribution drawers are installed at steps 5 and 8.

Step 5: Media Panels

Install the media panels onto the evaporation module frame. We recommended installing them row by row, and not column by column. Make sure that each media panel is properly installed into the one below.

Step 6: Media Panel Link Bracket

Install at least one media panel link bracket per level. This bracket is designed to re-enforce the structure by holding together the media panel and holding rail. Loosen the top two Philips screws from adjacent media panel frames, insert the bracket, and then tighten the two Philips screws.

Step 7: Holding Rail

Install one holding rail per level. Insert the holding rail onto at least one link bracket and engage the latches into the holding rail supports on both sides.

Note: In case the SKV evaporation module is equipped with a droplet separator (air velocity above 600FPM), repeat steps 5 to 7 for the installation of droplet separator panels.

Step 8: Water Distribution Drawers

Install the water distribution drawers onto the top frame (step 4) and adjust the top frame position to ensure proper sliding of the drawers. Confirm proper positioning of the top frame (step 4) and tighten the three nuts on each side.

Step 9 (optional): Pump Skid

The pump skid assembly is installed at the factory before shipping. If you need to remove it, first disconnect the electrical quick connector of the drain and then remove the Philips screw.

Step 10 (optional): Drain Manifold

The drain manifold assembly is installed at the factory before shipping. If you need to remove it, disconnect the drain hose from the bottom tank, and open the clamp maintaining the drain manifold assembly by removing the 5/16'' (8mm) nut. The drain manifold assembly can be directed either on the right-hand side (by default) or on the left-hand side of the bottom tank.

Step 11: Water Distribution Hoses

Install the water distribution hoses between the top drawers and the circulation pump manifold or solenoid valve outlets, by pushing each hose into the push-in connectors.

Stage 2 – Evaporation Module Positioning and Mounting

General Considerations

Consider the following points before deciding the location for the Evaporative Cooling Humidifier steam distribution system:

- Plan a location that is easy to access and permits an easy inspection and servicing of the Evaporative Cooling Humidifier.
- Do not install the Evaporative Cooling Humidifier where failure of the appliance could cause damage to the building structure or to other expensive equipment.
- Verify that the construction of the duct or AHU wall is suitable to support the maximum weight when the evaporation module is wet.
- We recommend installing the SKV evaporation module into a waterproof AHU or duct section. The SKV evaporation module is a self-contained humidifier/cooler however; leaks might occur at the water and drain connection point. Install a drain outlet connection at its lowest point within the cooling or humidification section.
- Construct the drain pipe in such a way that there is no water accumulation and stagnation.
- Make provision either on one side or both sides of the AHU or duct for water supply, drain line(s), and electrical conduit to the evaporation module.
- The SKV Evaporative Cooling Humidifier accepts the water supply, drain, overflow piping, and electrical connections from the right-hand or left-hand side of the evaporation module.

Positioning the Evaporation Module

- Level the evaporation module properly in order to ensure proper distribution of water (see Illustration 6 - Positioning and Mounting). Make sure that the drain outlet is at the lowest point of the unit.
- Do not leave any empty space around the evaporation module. In case there is some empty space, install blanking plates to prevent air passage.
- The unit is custom made to fit the AHU or duct dimension however; to allow easy installation and service a space of 2in (51mm) on both sides and 2in (51mm) on top of the evaporation must be planned.
- Provide a minimum access of 24" (600mm) downstream of the evaporation module for installation, inspection, commissioning, and maintenance. Also provide the same clearance, 24" (600mm) upstream, for easy commissioning and maintenance.
- Provide access to the sides of the unit through doors.

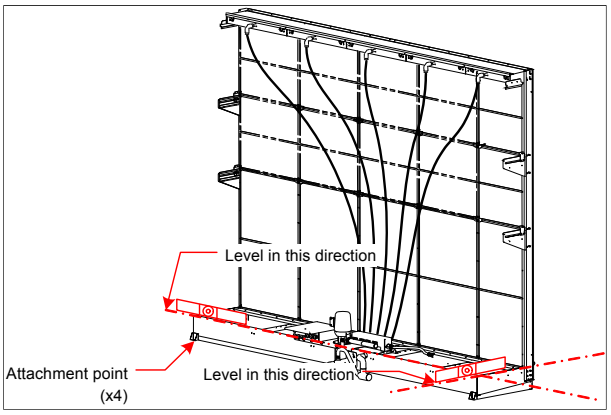

Illustration 6 - Positioning and Mounting

Mounting the Evaporation Module

- Secure the evaporation module to the AHU or duct by screws and bolts (not supplied) of suitable size.
- Attach the evaporation module in such a way that it will not vibrate or move under air velocity and pressure.

Stage 3 – Water Supply Installation

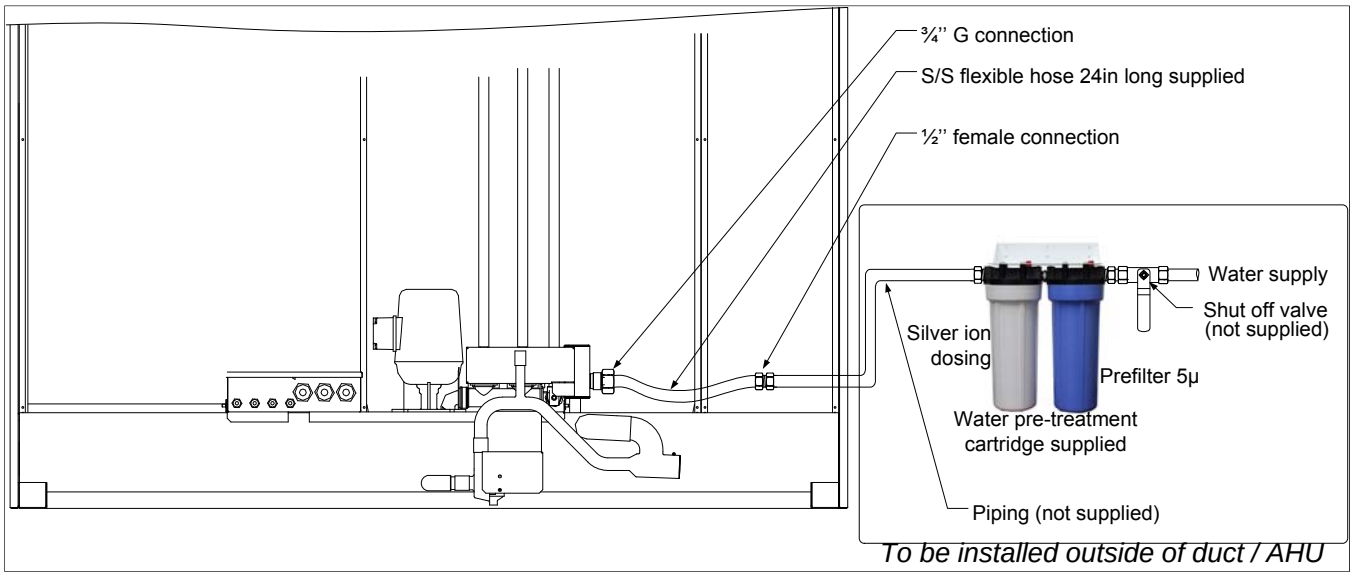

Illustration 7 - Water Supply Installation

Note: Do not over tighten hose fittings as this may damage the seals.

- Install an isolation valve (not supplied) on the water line near the evaporative module's inlet for easy maintenance and servicing. We recommend fitting a pressure gauge for commissioning and maintenance.
- Flush the water line thoroughly before connecting the feed water pipe-work to the evaporation module.
- Follow the water supply specifications as mentioned below:
  - Water Supply Size - Ø3/4''(20mm), garden hose
  - Maximum Water Supply Pressure - 70psi (4.8bar)
  - Maximum Water Supply Temperature - 68°F (20°C)
- Connect the humidifier to a clean drinking water supply.
  - The humidifier is capable of operating with a wide range of water qualities such as reverse osmosis (RO), or tap water. If the humidifier is connected to hard water, it will result in scale build-up on the evaporative module and will require frequent cleaning and replacement.
  - If the supplied water is treated with reverse osmosis or de-ionization filtration, control the total dissolved solid contents in the water, otherwise water acts as a solvent agent resulting in rapid evaporation and media degradation.
  - Water conductivity of the water should be between 100 and 550 microS/cm at 68°F (20°C).
  - For direct feed, water conductivity should not be lower than 150 microS/cm at 68°F (20°C). If it is lower, mix the treated water with tap water to achieve the recommended conductivity. Alternatively, install SKV with recirculation (SKVR) and setup the dilution cycle accordingly.

Stage 4 – Drain and Overflow Connections

Any installation work must be carried out by suitably qualified personnel.

Risk of flooding. Never connect drains to a closed pipe work. Always install a tundish to provide a suitable air gap.

Recirculation Model

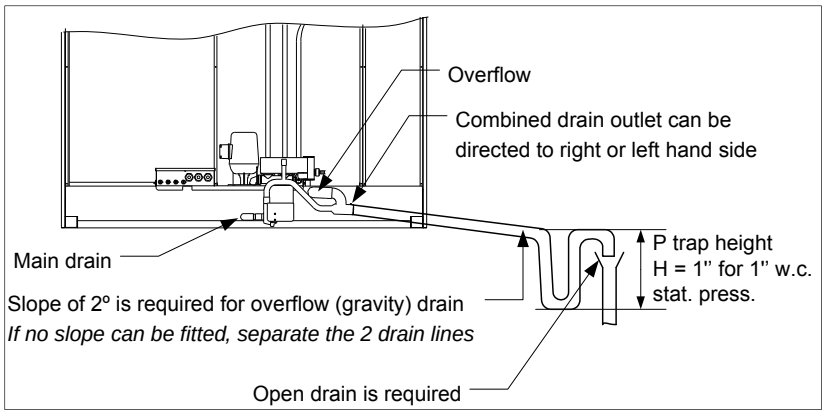

Direct Feed Model

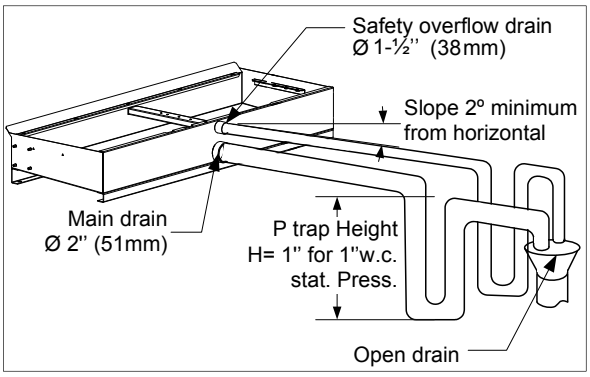

CAUTION: Do not combine the overflow and drain to a common pipe if the **width** of the evaporation module is **below 30'' (762mm)** or, if the **main drain** has to be **lifted** to the drain inlet of the building (if no slope can be fitted).

CAUTION: Do not combine the overflow and drain to a common pipe. Two independent traps should be installed for drain and overflow and sized according to the Table 5 below.

Illustration 8 - Drain and Overflow Connections

Table 4 - P Trap Installation

Drain Type	P Trap	Recirculation	Direct Feed
Main drain separated	Required if there is no drain pump	✓	x
Overflow separated	Always required	✓	x
Main drain and overflow combined to a common pipe	Always required	✓ if evaporation module over 30" (762mm) or if main drain is not lifted to drain inlet	✓

Table 5 - Water Drain and Overflow Specifications

SKV Model	Tank width	Drain outlet size	Overflow outlet size	Minimum slope	Trap size
Recirculation	≤70'' (1.8m)	Ø ¾'' (19mm)	Ø1.5'' (38mm)	2° or 1.4''for every 3ft of horizontal run. (35mm for 1m run)	1'' for every 1'' w.c of static pressure (25mm / 250Pa)
	>70''(1.8m)	Ø ¾'' (19mm)	Ø2'' (51mm)		
Direct feed	All	Ø2'' (51mm)	Ø1.5'' (38mm)	2° or 1.4''for every 3ft of horizontal run. (35mm for 1m run)	25mm for every 250Pa of air static pressure

For AHU or duct with negative pressure, specific precautions should be taken to isolate the drain line in order to avoid any back flow.

Stage 5 – Power Supply Connections

WARNING. All work concerned with electrical installation should only be performed by skilled and qualified technical personnel, such as electricians or technicians with appropriate training. The customer is responsible for ensuring their suitability.

WARNING. Risk of electric shock. Isolate all power supplies before installation and maintenance of the SKV Evaporative Cooling Humidifier.

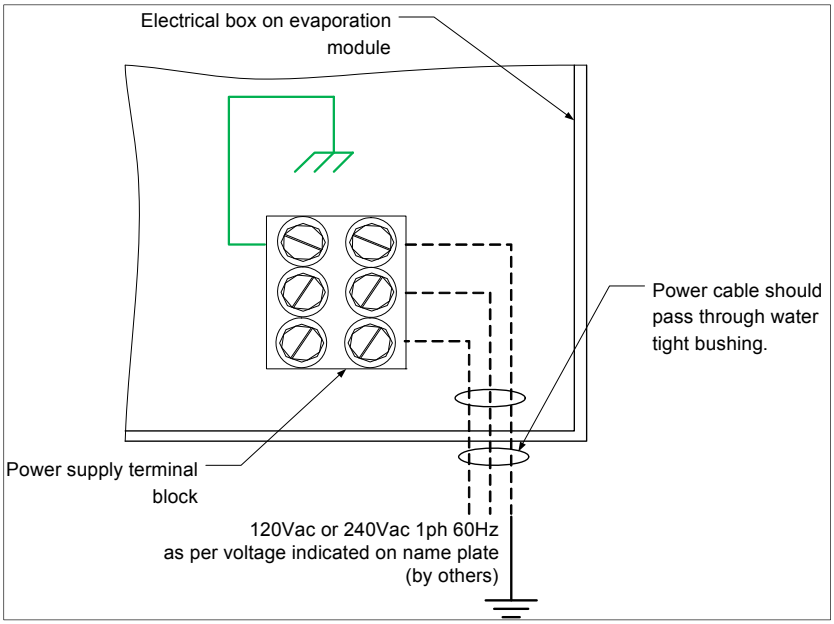

Illustration 9 - Power Supply Connections

Table 6 - Power Supply Specifications

Model	Voltage (V)	Current (A)
SKVR Recirculation model	120 – 1ph	5.5
	240 – 1ph	3
SKVD Direct feed model	120 – 1ph	1
	240 – 1ph	0.5

You **MUST** externally fuse all incoming power supplies for over current protection.

Isolate the electrical supply for the purpose of emergencies and servicing. We recommend installing a disconnect switch within 1m (3.3ft) of the humidifier. The isolator must have a contact separation of at least 1/8'' (3mm). Please observe local codes and regulations concerning the provision of electrical installations.

The installation engineer must ensure the following:

- Use of copper power conductors only.
- Size of the power conductors are suitable for the maximum current supplied.
- Incoming power cable is secured via suitably sized cable gland.
- Each terminal connection is secured firmly with a cable ferrule.
- Humidifier cabinet has an uninterrupted or unbroken electrical ground. Do not use the evaporation module's frame to connect to ground.

Stage 6 – Electrical Control Connections

WARNING. All work concerned with electrical installation should only be performed by skilled and qualified technical personnel, such as electricians or technicians with appropriate training. The customer is responsible for ensuring their suitability.

WARNING. Risk of electric shock. Isolate all power supplies before installation and maintenance of the SKV Evaporative Cooling Humidifier.

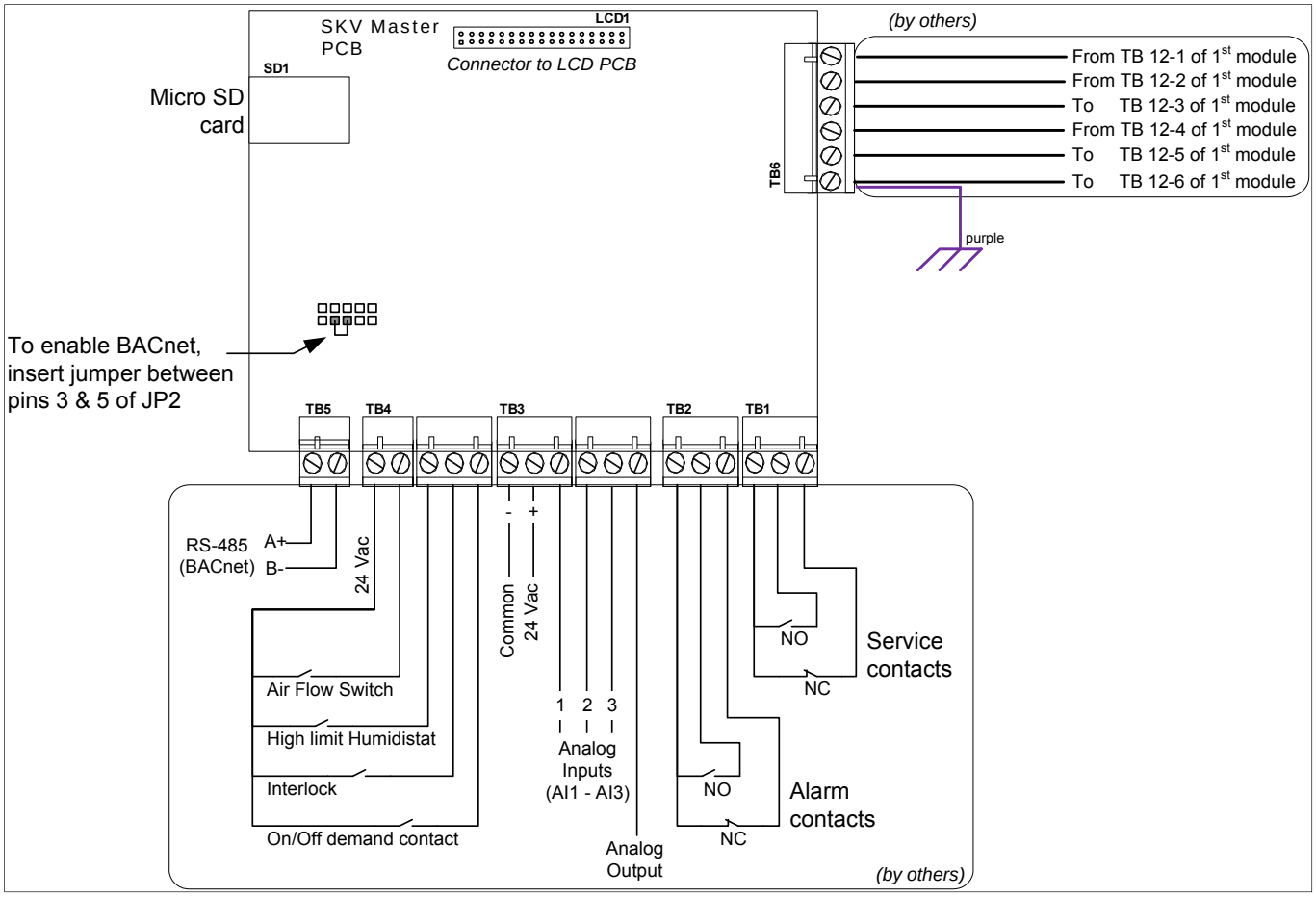

Illustration 10 - SKV Controller Wiring Diagram

Safety Contact Connections

Airflow switch contact should be wired between terminals TB4 1&2. If this contact opens, operation of the SKV unit will stop. The unit will display Airflow Switch open, but will **not** generate an alarm.

High limit humidistat contact should be wired between terminals TB4 1&3. If this contact opens, operation of the SKV unit will stop and an **Alarm** message will be displayed.

Interlock switch can be wired between terminals TB4 1&4. If this contact opens, operation of the SKV unit will stop and an **Alarm** message will be displayed.

On/Off Operation

For On/Off operation, connect the On/Off contact between TB4 1&5. If this contact opens, the SKV unit will turn off. If this contact closes, the SKV unit will operate.

Modulating Operation

Analog

Whatever the source of the control signal (BMS, room or duct humidistat, room or duct thermostat, or a combination) the signal(s) should be connected between Common and Analog input 1, 2 and/or 3. These analog inputs are configurable at step 1A “Settings” of the Controls menu (see page 17).

BACnet (network)

If the control signal is from a BACnet network, the RS485 A+ & B- should be connected to network (TB5). The network control signal will have to be selected at step 1A “Settings” of the Controls menu (see page 17). Also refer to step 1E “BACnet” of the Controls menu (see page 17) to setup the communication parameters.

Mounting of the Enclosure

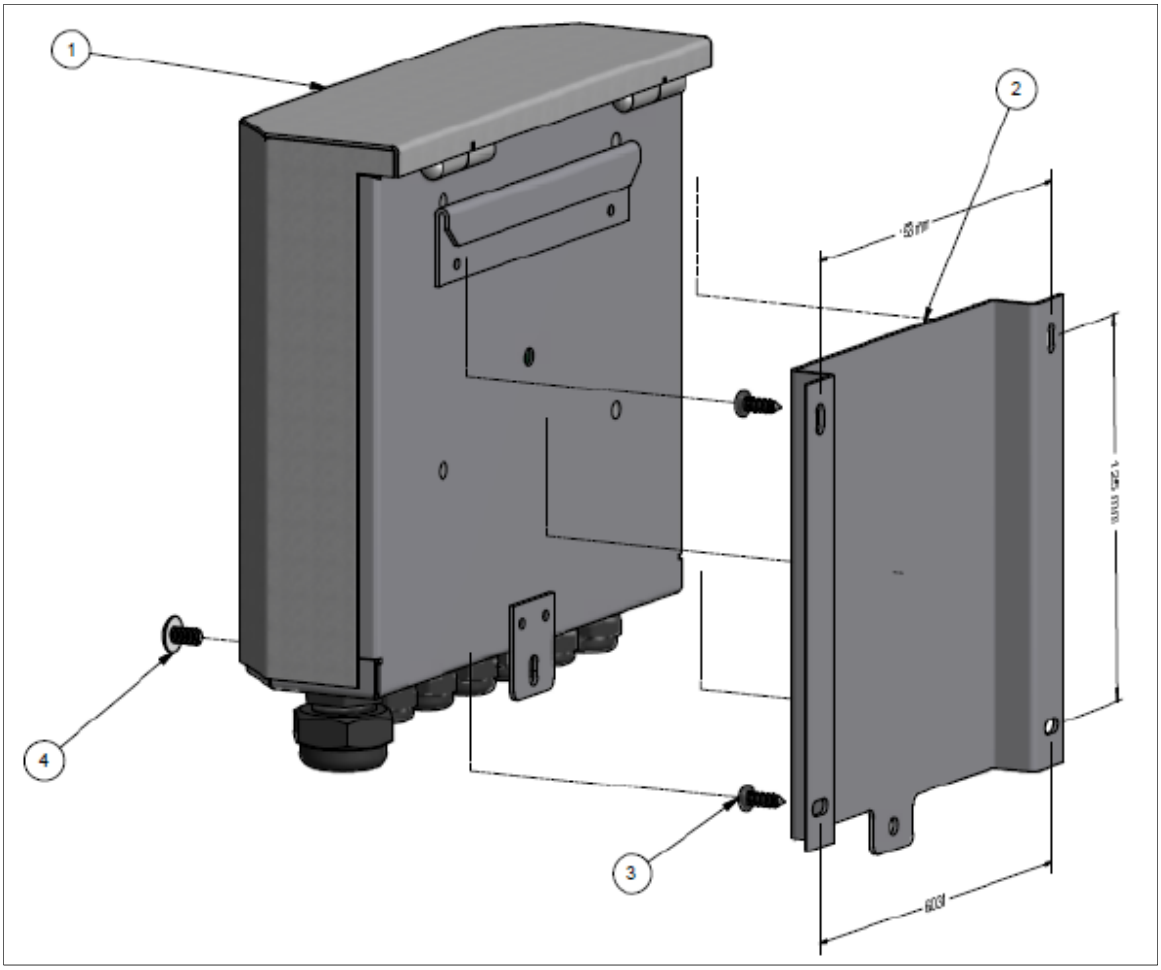

Illustration 11 - Mounting the Controller Enclosure

Stage 7 – SKV Controller Installation and Configuration

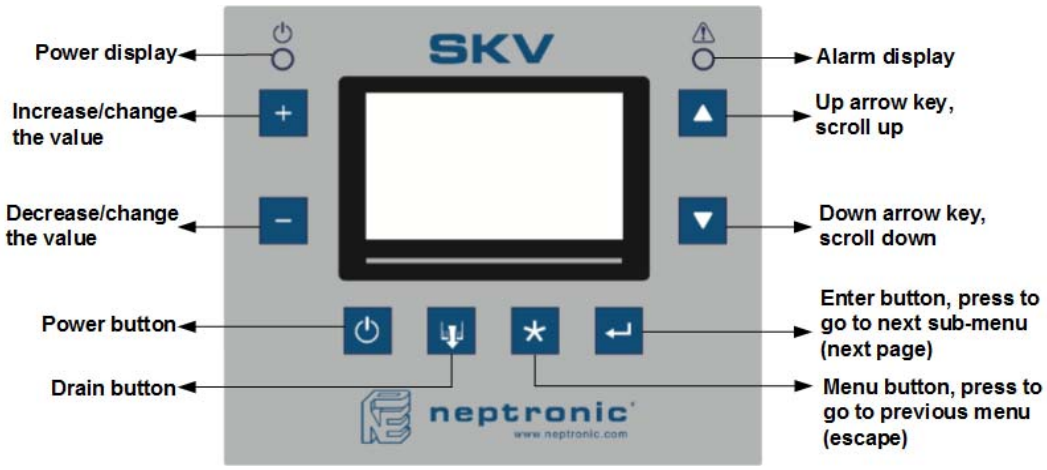

The power (on/off) and drain buttons are protected from accidental activation by a 3-second delay. ***The power or drain button must be pressed and held for 3 seconds to perform the related action.***

Menu Overview

When the SKV controller is in operation, the unit displays three information screens. The Product Info, Modules and System Info screens are displayed for 3 seconds each and then remains on the System Info screen. Press the ▲ and ▼ buttons located to the right of the screen to manually scroll through each screen.

Model		
Model	SKV85R	
Firmware	0.20	
Serial #	14V010001	▲ ▼
SD ►	2014-Mar-02 15 :13 :23	

The first screen indicates the model #, firmware revision installed and the controller's serial #.

The SD icon appears if the controller detects a micro SD card. Current time and date are also displayed.

Modules		
No. of modules	2	
Module 1	2 stages	
Module 2	3 stages	▲ ▼
SD ►	2014-Mar-02 15 :13 :23	

The second screen provides basic information on the evaporation module(s).

The SD icon appears if the controller detects a micro SD card. Current time and date are also displayed.

System Info		
Room Humidity	45% RH	
Room Temp.	21°C	
Duct Humidity	40% RH	▲
Demand	100.0%	▼
Water flow	1000kg/h	
SD ►	2014-Mar-02 15 :13 :23	

The third screen indicates the demand and water flow of the evaporative module(s).

The SD icon appears if the controller detects a micro SD card. Current time and date are also displayed.

Main Menu Configuration

A. Press the Menu * button.
B. Use the ▲, ▼ buttons to select the desired main menu category and press Enter ↵.
C. If password protection is enabled (see table below), enter the password and press Enter. If you enter the wrong password, the SKV controller displays an "INVALID PASSWORD" message.

Table 7 - Passwords

Mode/Menu	Password	Priority	Required
Controls	637	1	Always required
Installer	757	2	Required only if enabled at menu 1F
System Setup	372	3	Required only if enabled at menu 2E
Diagnostic	None	4	Not required

Note: If a password of higher priority has already been provided; individual passwords will not be required. For example, if the Installer menu password has been validated already, access to other menus such as Controls will be unlocked automatically.

D. Use the **+** and **-** buttons to increase and decrease the values. Use the ▲, ▼ buttons to scroll to the next or previous menu item. Values are saved as soon as a change is made
E. Press the Menu * button to go back one menu. Press the Enter ↵ button to advance to the next sub-menu.
F. To exit, press the Menu * button until you return to the menu overview or after 5 minutes of inactivity the controller will automatically exit the menu.

Note 1: Available settings and range selections may vary depending on current configuration. The tables in the following sections display all the possible selections. The Notes/Conditions column indicates the conditions required for the associated setting to appear.

Note 2: The Drain Schedule (Menu 2B) and Occupancy Schedule (Menu 2C) on page 18 do not support schedules that cross-over midnight during the same day. For example, Wednesday from 19:00 to 8:00 will stop at midnight. In this case you must configure 2 days as follows: Wed–19:00, Thu–00:00, Thu–08:00.

Main Menu - Controls

CONTROLS	Settings	Default	Range	Notes/Conditions
1A) Settings	Control Mode:	Int.Temp	Int.in RH, Int. in Temp, Network, Ext.AI1, Ext.AI2, Ext.AI3	*Network* option only available with BACnet models
	Setpnt Source:	Internal	Internal, Network, Ext.AI1, Ext.AI2, Ext.AI3	If *Int. in Temp* or *Int. in RH* at 1A "Control Mode". *Network* option only available with BACnet models
	Room RH Src:	AI1	AI1, AI2, AI3, Network, None	*Network* option only available with BACnet models
	Room Temp Src:	AI2	AI1, AI2, AI3, Network, None	*Network* option only available with BACnet models
	High Limit Src:	AI3	AI1, AI2, AI3, Network, None	*Network* option only available with BACnet models
	Feedback Signal:	2-10Vdc	0-10Vdc, 2-10Vdc	
1B) Control Mode	Occ.Setpnt:	10°C (50°F) or 40% RH	10.0 to 40.0°C (50.0 to 104.0°F) or 10 to 90% RH	If *Int. in Temp* or *Int. in RH* at 1A "Control Mode" and *Internal* at 1A "Setpnt Source".
	Setpnt Signal:	0-10Vdc	0-10Vdc, 2-10Vdc, 0-20mA, 4-20mA	If *Int. in Temp* or *Int. in RH* at 1A "Control Mode" and *External* (Ext. AI1, AI2, AI3) at 1A "Setpnt Source".
	Prop.Ramp:	0.5°C (0.9°F) or 5.0% RH	0.5°to 5.0°C (0.9 to 9.0°F) or 1.0 to 20.0% RH	If *Int. in Temp* or *Int. in RH* at 1A "Control Mode"
	Integral Ramp:	0.5°C (0.9°F) or 5.0% RH	0.5°to 5.0°C (0.9 to 9.0°F) or 1.0 to 20.0% RH	If *Int. in Temp* or *Int. in RH* at 1A "Control Mode"
	Deadband:	0.1°C (0.2°F) or 2.0% RH	0.5°to 5.0°C (0.9 to 9.0°F) or 1.0 to 20.0% RH	If *Int. in Temp* or *Int. in RH* at 1A "Control Mode"
	External signal:	0-10Vdc	0-10Vdc, 2-10Vdc, 0-20mA, 4-20mA	If *External* (Ext.AI1, Ext.AI2, Ext.AI3) at step 1A "Control Mode". Only this option appears
	No additional settings	n/a	n/a	No settings to configure on this screen, if Network at 1A "Control Mode".
1C) Room Sensor	RH Signal:	0-10Vdc	0-10Vdc, 2-10Vdc, 0-20mA, 4-20mA	If *AI1*, *AI2*, or *AI3* at step 1A "Room RH Src"
	Temp. Signal:	0-10Vdc	0-10Vdc, 2-10Vdc, 0-20mA, 4-20mA	If *AI1*, *AI2*, or *AI3* at step 1A "Room Temp Src"
	Min.Temp Range:	-20°C (-4°F)	-50 to 100°C (-58 to 212°F)	
	Max.Temp Range:	+80°C (176°F)	-50 to 100°C (-58 to 212°F)	
1D) High Limit	Signal:	0-10Vdc	0-10Vdc, 2-10Vdc, 0-20mA, 4-20mA	If *Int.in RH* at 1A "Control Mode", *Network* at 1A "Setpnt Source" and *AI1*, *AI2*, or *AI3* at 1A "High Limit Src".
	Setpoint:	10 %RH	10 to 90 %RH	
	Prop. Ramp:	0.0 %RH	10 to 20 %RH	
	No additional settings	n/a	n/a	No settings to configure on this screen, if None at 1A "High Limit Src".
1E) BACnet	MAC Address:	1	0 to 254	Available with BACnet models only
	Device Instance:	3153000	0 to 4194302	
	Auto Baud Rate:	On	On (Enable), Off (Disable)	
	Baud Rate:	9600	9.6k, 19.2k, 38.4k, 76.8k	
	Fallback Timeout:	2 min	1 to 15 minutes	
1F) Password	Controls Menu	Off (Disable)	On (Enable), Off (Disable)	

Main Menu - System Setup

Sub-Menu	Settings	Default	Range	Notes/Conditions
2A) Clock	Time Format:	12h	12h (AM/PM) or 24h	
	Actual Time:	00.00	0 to 24 hours	
	Date:	13:09:03	YY/MM/DD	
	UTC diff:	+4h	-12 to +14 hours	
	Daylight Saving:	Off	On (Enable), Off (Disable)	
2B) Drain Schedule	Drain schedule disabled	n/a	n/a	The drain schedule is only available for Recirculation models with the *Auto Drain (step 4C)* set to *Schedule* in the Installer menu. The drain schedule is not available for Direct Feed models
	Day:	Monday	Monday to Sunday	Each day of the week can have different events; up to 4 events each. The events displayed are configured and apply to the day that's displayed. If you select **Wait**, **Start Drain**, or **Stop Drain**, a clock setting is displayed. Set the time/duration at/in which the unit can perform the drain task. An event cannot cross-over midnight, see Note 2 on page 16. Wait = time before drain sequence can start. Start Drain = time at which drain sequence will start. Stop Drain = time at which drain sequence will stop.
	Event 1:	Unused	Unused, Wait, Start Drain, Stop Drain | 00:00 to 23:59	
	Event 2:	Unused	Unused, Wait, Start Drain, Stop Drain | 00:00 to 23:59	
	Event 3:	Unused	Unused, Wait, Start Drain, Stop Drain | 00:00 to 23:59	
	Event 4:	Unused	Unused, Wait, Start Drain, Stop Drain | 00:00 to 23:59	
2C) Occ.Schedule	Occupancy schedule disabled	n/a	n/a	The drain schedule is only available when the Occupancy Schedule *(step 4B) is* set to *ON* in the Installer menu.
	Day:	Monday	Monday to Sunday	Each day of the week can have different events; up to 4 events each. The events displayed are configured and apply to the day that's displayed. If you select **Occup.**, **Unoccup.**, **Vacancy** or **Off**, a clock setting is displayed. Set the time/duration at/in which the unit can perform the drain task. An event cannot cross-over midnight, see Note 2 on page 16. Occup. = duration the unit remains in Occupancy mode. Unoccup. = duration the unit remains in Unoccupied mode. Vacancy = duration the unit remains in Vacancy mode. Off = duration the unit remains Off.
	Event 1:	Unused	Unused, Occup., Unoccup, Vacancy, Off | 00:00 to 23:59	
	Event 2:	Unused	Unused, Occup., Unoccup, Vacancy, Off | 00:00 to 23:59	
	Event 3:	Unused	Unused, Occup., Unoccup, Vacancy, Off | 00:00 to 23:59	
	Event 4:	Unused	Unused, Occup., Unoccup, Vacancy, Off | 00:00 to 23:59	
2D) Measure	Temp Units:	° F	°C or °F	
	Flow Display:	Mass Flow	% or Mass Flow	
	Mass Flow Units:	lb/h	kg/h or lb/h	
2E) Options	Setup Password:	Off	On (Enable), Off (Disable)	If enabled, the System Menu password is **372**.
	Alarm Beep:	On	On (Enable), Off (Disable)	
	Key Press Beep:	On	On (Enable), Off (Disable)	
	Contrast:	5	0 to 10	
	Language:	English	English or Français	

Main Menu - Diagnostics

Sub-Menu	Settings	Default	Range (* *indicates no configuration; display only)*	Notes/Conditions
3A) Functions	Reset Alarm:	No	Yes or No	Set to *Yes* to reset any alarms that have been restored and require a manual reset. Refer to Alarms on page 23.
	Start Drain Cycle:	No	Yes or No	Set to *Yes* to start the drain sequence. The time required varies depending on various factors, such as size of tank, quality of drain and factory setting of drain completion time. “In Progress” is displayed until the cycle is completed.
	Disinfection Time:	15 min	15 to 30 minutes	Set to *Yes* to start the disinfection sequence. The sequence fills the tank, and then runs the module(s) at 100% for the duration of the selected *Disinfection Time*. It then performs an auto-drain sequence and returns to normal operation. If during the *Disinfection Time*, the tank needs to be filled again, the timer will stop until the tank is filled.
	Start Disinfect.	No	Yes or No	
3B) Cleaning	Cleaning Due On:	YY-MM-DD	*	The date represents 3 to 12 months after setting “Cleaning Done?” to *Yes*. This “Cleaning Interval” is set by the Installer at step 4A in the Installer menu. A “Service Warning” appears 100 hours before the due date. A “Service Alarm” appears on the due date.
	Last Cleaning:	YY-MM-DD	*	Displays the date at which the “Cleaning Done?” was set to *Yes*.
	Cleaning Done?	No	Yes or No	When the unit has been cleaned, set this value to Yes to reset the “Cleaning Due On” date and “Last Cleaning” date.
	Total Runtime	0000 h	*	Displays total number of hours the unit is in function.
3C) Service	Last Silver Ion	YY-MM-DD	*	Displays the date at which the “Silv. Ion Changed” was set to *Yes*.
	Silv. Ion Changed?	No	Yes or No	When the Silver Ion cartridge has been changed, set this value to *Yes* to reset the “Last Silver Ion?” date. The due date is variable based on water flow and time in use. A “Service Alarm” appears on the due date.
	UV Lamp Due On:	YY-MM-DD	*	The date represents 1500 to 3000 hours after setting “UV Lamp Changed?” to *Yes*. The “UV Lamp Notice” (no. of hours) is set by the Installer at step 4A in the Installer menu. A “Service Alarm” appears on the due date.
	Last UV Lamp:	YY-MM-DD	*	Displays the date at which the “UV Lamp Changed?” was set to *Yes*.
	UV Lamp Changed?	No	Yes or No	When the UV lamp has been changed, set this value to *Yes* to reset the “UV Lamp Due On” date and “Last UV Lamp” date.
3D) Inputs	Control Mode:	Current value	* (Int.RH, Int. Temp, Network, Ext.AI1, Ext.AI2, Ext.AI)	
	Setpnt Source:	Current value	* (Internal, Network, Ext.AI1, Ext.AI2, Ext.AI3)	
	High Limit Src:	Current value	* (AI1, AI2, AI3, Network, None)	
	Setpnt :	Current value	* (mV)	If *External* (Ext.AI1, Ext.AI2, Ext.AI3) at step 1A “Setpnt Source”.
	Demand:	Current value	* (mV)	If *External* (Ext.AI1, Ext.AI2, Ext.AI3) at step 1A “Control Mode”.
	Room Temp:	Current value	* (mV)	If *External* (Ext.AI1, Ext.AI2, Ext.AI3) at step 1A “Room Temp Src”.
	Room Humidity:	Current value	* (mV)	If *External* (Ext.AI1, Ext.AI2, Ext.AI3) at step 1A “Room RH Src”.
	High Limit Sensor:	Current value	* (mV)	If *External* (Ext.AI1, Ext.AI2, Ext.AI3) at step 1A “High Limit Src”.
	Demand:	Current value	* (Opened or Closed)	

Sub-Menu	Settings	Default	Range (* *indicates no configuration; display only)*	Notes/Conditions
	Air Flow:	Current value	* (Opened or Closed)	
	High Limit:	Current value	* (Opened or Closed)	
	Interlock:	Current value	* (Opened or Closed)	
	Water Lvl Sensor:	Current value	* (Hz)	
	Water T. Sensor:	Current value	* (mV)	
	Low Water Float:	Current value	* (Opened or Closed)	
	High Water Float:	Current value	* (Opened or Closed)	
3E) Outputs	Feedback:	Current value	* (mV)	
	Alarm Relay:	Current value	* (Off or On)	
	Maint.Relay:	Current value	* (Off or On)	
	Fill Valve:	Current value	* (Off or On)	
	Drain Pump:	Current value	* (Off or On)	
	Distr. Pump:	Current value	* (Off or On)	
	Stage Valve 1:	Current value	* (Off or On)	
	Stage Valve 2:	Current value	* (Off or On)	
	Stage Valve 3:	Current value	* (Off or On)	
	Stage Valve 4:	Current value	* (Off or On)	
3F) Miscellaneous	Ctrl. uC Temp:	Current value	* (°C or °F)	Controller microprocessor temperature
	Ctrl. PCB Temp:	Current value	* (°C or °F)	Controller PCB (printed circuit board) temperature
	Module uC Temp:	Current value	* (°C or °F)	Module microprocessor temperature
	Module PCB Temp:	Current value	* (°C or °F)	Module PCB (printed circuit board) temperature
	Water Level:	Current value	* (%)	
	Water Temp:	Current value	* (°C or °F)	
	Network Timeout:	Current value	* (seconds)	
	Fill Countdown:	Current value	* (seconds)	
	Drain Countdown:	Current value	* (seconds)	
	Inact Countdown:	Current value	* (seconds)	
	Inlet Countdown:	Current value	* (seconds)	
	State Countdown:	Current value	* (seconds)	
	Last Drain:	Current value	* (00:00 | hh:mm)	
3G) History Log	Controller Alarms	n/a	Example : Controller alarm @2014-03-02 12:12:15 Off Room RH Sensor Fault	Press enter to view list of controller's last three alarms.
	Module 1 Alarms:	n/a	Example : Module 1 alarm @2014-03-02 12:12:15 Off High Limit Sensor Fault	Press enter to view list of selected module's last three alarms.
	Trend # days:	7 days	7 to 21 days	
	Trend Interval:	5 min	1 to 30 minutes	
	Events Over Last:	3 months	1 to 6 months	

Main Menu - Installer

INSTALLER	Settings	Default	Range	Notes/Conditions
4A) Service	Cleaning Interval:	3 months	3 to 12 months	A "Service Warning" appears 100 hours before the due date. A "Service Alarm" appears on the due date. The due date is displayed in *Step 3B* of the Diagnostics menu.
	Silver Ion Notice:	Off	On (Enable), Off (Disable)	The due date is variable based on water flow and time in use. If set to *On*, a "Service Alarm" appears on the due date. If set to *Off*, notification is disabled.
	UV Lamp Notice:	2000 h	1500 to 3000 hours	A "Service Alarm" appears on the due date. The due date is displayed in *Step 3C* of the Diagnostics menu.
	On Service Alarm:	Unit OFF	Unit ON, Unit OFF	Determines whether the unit remains turned on or off through the duration of any service alarm (e.g. UV lamp service alarm)
	Water Lvl Calib.:	Off	On (Enable), Off (Disable)	Performs an automatic calibration of the capacitive water level sensor. If set to *On*, every time the tank is filled. If set to *Off*, on start up and if the sensor becomes uncalibrated.
4B) Occupancy	Schedule:	Off	On (Enable), Off (Disable)	If *Int. in Temp* or *Int. in RH* at step 1A "Control Mode" in Controls menu. Select *On* to enable the occupancy schedule defined at step 2C "Occ. Schedule" in the System Setup menu.
4C) Auto Drain	Auto Drain:	Interval	Schedule or Interval	Appears only with Recirculation models. The drain schedule is not available for Direct Feed models. If set to *Schedule*, refer to "Drain Schedule" in step 2B of the System Setup menu. If set to Interval, refer to Interval time below.
	Interval:	4h	1 to 24 hours	If *Interval* at step 4C "Auto Drain".
	Module Inactivity:	6 h	4 to 72 hours	Maximum allowable time of inactivity for the evaporation module. If there was no demand for the entire period, the unit will perform an automatic drain sequence (empty and fill the tank).
	Inlet Inactivity:	7 days	1 to 7 days	Maximum allowable time of inactivity for the water inlet.
	Inlet Drain Time:	10s	1 to 60 seconds	Regulates water line drain time in the case where the Inlet Inactivity delay is attained.
4D) Water Dilution	Interval:	30 min	30 to 1500 minutes	Set the interval between each water dilution cycle and the number of cycles. These values are determined by the inlet water quality as defined in Dilution on page 22.
	No. of Cycles:	2	0 to 255 cycles	
4E) Sensor Offset	Room RH Sensor:	0 %RH	-10.0 to 10.0 %RH	If *External* (Ext.AI1, Ext.AI2, Ext.AI3) at step 1A "Room RH Src".
	Room Temp Sensor:	0 °C/°F	-5.0 to 5.0°C (- 9.0 to 9.0°F)	If *External* (Ext.AI1, Ext.AI2, Ext.AI3) at step 1A "Room Temp Src".
	High Limit Sensor:	0 %RH	-10.0 to 10.0 %RH	If *External* (Ext.AI1, Ext.AI2, Ext.AI3) at step 1A "High Limit Src".
4F) Test Mode	Duration:	5 min	5 to 60 minutes	When the Test State is set to *On*, you can simulate any demand value and navigate through any of the menus. The red Alarm LED illuminates to indicate that you are in test mode and the screen displays the remaining time that device will be in test mode. To exit, set the Test State to *Off* or wait for the test duration to elapse.
	Demand:	0 %	0 to 100 %	
	Test State:	Off	On (Enable), Off (Disable)	

Water Dilution

ATTENTION: Risk of scale deposits. Correctly set the Water Dilution Interval (Step 4D in Installer menu) and No. of Cycles (4D in Installer menu) according to the water quality or conductivity during commissioning of the humidifier. Failure to do so will result in scale deposits on the evaporation module and the media panels.

The process of evaporative humidification results in built-up of dissolved solids in the water tank. To control this, a water dilution cycle is run at specific intervals to clean the tank. This water dilution cycle does not interrupt normal system operation. During the cycle, both the inlet and drain valves open to renew the water in the tank. The interval and number of cycles of the water dilution cycle are directly related to the total dissolved solids or water conductivity of the water used. This setting should be defined at the time of installation and commissioning of the humidifier based on the quality of water as shown in the table below.

Table 8 - Water Dilution (determine interval and number of cycles)

Water Quality		Dilution Interval (min)	Number of Cycles
Water Quality Total Dissolved Solids (ppm)	Conductivity (microS/cm)		
352	550	30	5
320	500	100	5
256	400	200	5
192	300	250	5
160	250	400	4
128	200	600	3
96	150	800	2
64	100	1000	1

Firmware Update

The firmware update function is available when the unit detects a new firmware version on the micro SD card and the "Firmware upgrade available" message appears.

The firmware files must be installed in a folder named “skv_fw_pack” in the root of the micro SD card.

A. Press the Menu * button.
B. Use the ▲, ▼ buttons to select “5) Firmware Upgrade” and press Enter ↵.

```
5        Firmware Update

Password          000
```

Enter the Installer password [**757**].

Use the + and - buttons to increase and decrease the numbers, use the ▲, ▼ buttons to change digit, and then press Enter ↵ to validate the password.

```
5        Firmware Update

         From   To     Update
Module   018    020    No
Controller 018  020    No
```

When performing a firmware upgrade. Always start by updating the Module firmware first.

To update, change the value from No to Yes.

The upgrade process can take a few minutes.

Alarms

Display	Description	Alarm Reset
Air flow open	Indicates that the air flow sensor is open. Verify that the signal from the air flow sensor is present at the SKV controller's input on the PCB (see schematic).	Automatic
High limit item open	Indicates that the high limit item is open. Verify that the signal from the high limit (duct) sensor is present at the SKV controller's input on the PCB (see schematic).	Automatic
Interlock open	Indicates that the interlock and the cut-out circuitry are open. Verify that the signal from the interlock contact is present at the SKV controller's input on the PCB (see schematic).	Automatic
Room temp sensor fault	Indicates that the room temperature sensor is defective or incorrectly wired.	Manual *
Room RH sensor fault	Indicates that the room humidity sensor is defective or incorrectly wired.	Manual *
High limit sensor fault	Indicates that the high limit sensor is defective or incorrectly wired.	Manual *
Module # timeout	Indicates that module is not communicating. Verify wiring of the communication line (see schematic)	Automatic
Output limited warning	Indicates that the output capacity of one or more modules is limited by one of the following: - High limit cut-out - Analog high limit RH	Automatic
Module # service warning	Appears 100 hours before due date of next unit cleaning. This "Cleaning Interval" (3-12 months) is set by the Installer at step 4A in the Installer menu.	Manual †
Module # service alarm	Indicates that the due date for servicing one of the following has arrived: - Service and clean the evaporative modules - Replace the silver ion cartridge - Change the UV lamp	Manual †
Module # drain fault	Indicates that the low water level float sensor was not reached at the end of the drain sequence. Verify and remove any obstructions in the drain line.	Manual *
Module # inlet fault	Indicates that the high water level float sensor was not reached within the programmed delay. Verify and remove any obstructions in the water inlet line and verify that the stop valve is not closed.	Manual *
Module # water level sensor fault	Indicates that the capacitive water level sensor is defective. Verify the sensor's general condition and ensure the proper connection of the wire jacket between the sensor and the PCB of the evaporation module.	Manual *
Module # water temperature fault	Indicates that the water temperature sensor located within the capacitive water level sensor is defective. Verify the sensor's general condition and ensure the proper connection of the wire jacket between the sensor and the PCB of the evaporation module.	Manual *
Module # water level alarm	Indicates that the water level is not calibrated properly.	Automatic
Module # high water temperature alarm	Indicates that the water temperature in the tank is above 77˚F [25˚C], which is a risk for developing Legionellosis. Verify the temperature of the supply water.	Automatic
Module # high water temperature fault	Indicates that the water temperature in the tank is above 77˚F [25˚C] even after two drain or fill cycles, which is a risk for developing Legionellosis. Verify the temperature of the supply water.	Manual *
Module # water float fault	Water level float is stuck.	Automatic

** (step 3A in Diagnostic menu)*

† (step 3B or 3C in Diagnostic menu)

Servicing and Maintenance

This humidifier must be installed, operated, and maintained by suitably qualified personnel and in accordance with this manual.

Preventative Maintenance

The SKV Evaporative Cooling Humidifier requires both inspection and service at regular intervals. The frequency of servicing depends on factors such as water quality, capacity and the number of hours in operation. It is recommended to inspect and service the evaporation module after 200 hours post commissioning. This inspection is necessary to determine the frequency of both inspection and service.

Verification List

Perform the following activities regularly to ensure optimal performance and operation of the evaporative module(s).

- Check for water leaks.
- Check for stagnant water.
- Observe the operation of the water flow and evaporation cycle.
- Check drain operation and flow.
- Ensure that all electrical connections are secure.
- Ensure that the 5µ water PP pre-filter is not clogged.
- Verify if the Silver Ion “service warning” has appeared. If so, replace the Silver Ion dosing cartridge
- Ensure that the air duct filter upstream of the SKV evaporation module is clean.
- Check for any accumulation of dirt in the bottom of the tray. If there is a significant presence of impurities, clean the tank at the bottom of the unit.
- Check the flow control at the output of the pump and clean or replace if necessary.
- Ensure that the water supply hoses at the top of the evaporation module are clean and in good condition.
- Remove the water distribution trays at the top of the evaporation module and make sure they are clean, clean if necessary.
- Remove the cassette containing the media and remove / clean any residue or deposits accumulated on the media or frames.

Water Sampling and Testing (Hygiene)

Legionella disease can be fatal. Maintain and control the water system of SKV Evaporative Cooling Humidifier according to the local Health & Safety regulation codes.

SKV Evaporative Cooling Humidifier has been designed to minimise any possible risk of Legionellosis growth. However, perform the following checks in order to reduce the growth of Legionellosis:

- Conduct a risk assessment of the water system by a competent authority.
- Implement appropriate inspection and control measures.
- Maintain water temperature below 68°F [20°C].
- Maintain a clean, drinking quality water supply.
- Avoid water stagnation.
- Carry out regular microbiological testing of water (counting the number of bacterial units).
  Refer to the ISO 5667-1 standard (Water quality - Sampling - Part 1: Guidelines for the design of programs and sampling techniques)
- Clean and disinfect the system regularly. Refer to Legionella and the prevention of legionellosis, by World Health Organization 2007, ISBN 92 4 156297 8 for more detailed advice on control measures.
- Apply disinfection measures based on the results of visual inspection and microbiological tests.

- Record and evaluate the results obtained during verifications, servicing and microbiological testing in order to improve the control plan.

If the SKV Evaporative Cooling Humidifier is stopped for extended periods (over 24 hours), make sure the tank at the bottom of the unit and the water supply hose to the unit are drained; unless there is a regular renewal of the water system. Contamination of the water system can cause the development of Legionella bacteria that can be fatal.

Table 9 - Proposed plan of control and disinfection according to results of microbiological testing of water

Aerobic Heterotrophic Count (CFU/ml)	Required Action
10,000 or less	Acceptable control. No remedial action required.
More than 10,000 and up to 100,000	Run a disinfection cycle with chlorine dioxide; perform another microbiological test of the water after the disinfection cycle. If the result is not reduced below 10,000 CFU / ml or less, then perform a manual cleaning and disinfection and review the control programming before restarting the Evaporative Cooling Humidifier.
More than 100,000	Immediately stop the machine, unmount the Evaporative Cooling Humidifier, perform a manual cleaning and disinfection, and review the control programming before restarting the unit. Corrective action should be undertaken to reassess the level of hygiene control and a new risk analysis of the water network and system.

Disinfection

Before commencing a disinfection cycle, perform the following functions:

- Assess the situation for any security risk with the person responsible for health and safety of the building.
- Check records, namely, sample results of microbiological testing of water.
- If possible, carry out disinfection when the building is unoccupied.

All surfaces that require disinfection or cleaning must be in contact with the same concentration of disinfection solution for same amount of time. Ensure that the disinfection solution reaches all the ends of lines of the pipe-work. It may also be necessary to disinfect the supply water system pipe-work or water treatment systems. Neptronic recommends routine disinfection of the humidifier in the following situations:

- At initial commissioning.
- Depending on the results of the microbiological water testing and monitoring plan and sampling adopted (see Table 9 above).
- If the system or part of it has been shutdown and/or substantially altered, creating a risk of contamination.
- During or following an outbreak, or suspected outbreak of Legionellosis.

Recommended Disinfection Equipment

- Chlorine dioxide
- Chlorine

Disinfection Method Statement

Step 1 - Preparation

- Refer to the manufacturer's recommendations for concentrations for applying and the method of preparation of the solution.
  - When using chlorine dioxide, do not exceed a concentration of 2.5mg per liter of water to be disinfected. The chlorine dioxide is effective regardless of the water's PH level.
  - When using chlorine, do not exceed a concentration of 0.5mg per liter of water to be disinfected. Note the concentration of chlorine depends upon the optimal pH of the water.
- Make sure that the air system (central air or ventilation system) is stopped
- Make sure the SKV Evaporative Cooling Humidifier is stopped.

Step 2 - Mix disinfection solution

- Mix the disinfection solution following the manufacturer's instructions.
- The calculation of the volume to be treated should take into account the volume of the tank at the bottom of the Evaporative Cooling Humidifier, but also the volume of all media cassettes.

Note: It may be necessary to clean the tank at the bottom of the Evaporative Cooling Humidifier prior to disinfection if it is particularly contaminated or dirty.

Step 3 – Start the disinfection cycle

- Add disinfection solution to tank at the bottom of the unit and allow mixing.
- Go to step 3A in the Diagnostics menu, set the *Disinfection Time* and select *Yes* to start the disinfection sequence.
- The sequence fills the tank, and then runs the module(s) at 100% for the duration of the selected *Disinfection Time*. It then performs an auto-drain sequence and returns to normal operation. If during the *Disinfection Time*, the tank needs to be filled again, the timer will stop until the tank is filled.

Step 4 - Neutralise and rinse

- It is possible that the disinfectant used requires neutralization after application.
- In case neutralization is required by the manufacturer, repeat steps 2 and 3 with the neutralizing solution.

Step 5 – Restart and new microbiological testing of water

- Once steps 1-4 are completed, the air system (central air or ventilation system) and the Evaporative Cooling Humidifier can be restarted in auto mode.
- A new microbiological test should be performed immediately after to confirm that the number of heterotrophic organisms is less than 10,000 CFU / ml (as per Table 9 on page 25)

De-scaling

If untreated tap water is used, de-scaling of the Evaporative Cooling Humidifier may be required. To avoid accumulation of scale, Neptronic recommends using RO water whose conductivity is between 100 and 550 micro S/cm. When using city water, Neptronic recommends a visual inspection of all parts of the evaporative module one month after commissioning to define the required frequency of de-scaling based on the accumulation of scale observed. List of solutions recommended scaling:

- Commercial phosphoric acid.

De-scaling Method Statement

Step 1 - Preparation

- Refer to the manufacturer's recommendations for concentrations to apply and the method of preparation of the solution. When using phosphoric acid, do not exceed a concentration of 1 volume of acid for 10 parts water.
- Make sure that the air system (central air or ventilation system) is stopped
- Make sure the SKV Evaporative Cooling Humidifier is stopped.

CAUTION: When working with de-scaling solution, always wear appropriate personal protective clothing, protective gloves, and eye protection.

Step 2 - Dismantle the Evaporative Module

- Turn off and isolate electrical supplies to the unit.
- Remove all media cassettes.
- Remove the pump skid.

Step 3 - Prepare de-scaling solution

CAUTION: Risk of emanation of gas irritants, ensure to perform these tasks in a well ventilated area, ideally the following steps should be done outside.

- Mix the de-scaling solution according to the manufacturer's recommendations
- Use a clean container and of a suitable size to completely immerse each media cassette.
- Make sure you also have a second clean container and of a suitable size filled with clean, clear water to immerse each cassette after de-scaling.

Step 4 - Remove scale from individual cassettes

- Using a soft brush, lightly brush any loose scale from the surface of the media.
- Lower the individual cassettes into the de-scaling solution.
- Keep each matrix cassette in the solution until the reaction between the calcium on the matrix and the de-scaling solution is complete.

Note: The effect of the de-scaling solution will vary depending on the condition of the media's material. For an improved effect, the above process may have to be repeated.

- Clean and if necessary apply de-scaling solution on all parts of the evaporation module which are covered with scale.

Step 5 - Rinse

- Lift the individual cassettes out of the acid solution, allow any excess de-scaling solution to drip, and directly submerse into the clean water container.
- If necessary, rinse a second time while profusely wetting the media.

Step 6 - Re-assemble and restart

- Replace the media cassettes, media frames and recirculation pump skid on the evaporation module.
- Reconnect the power supply.
- On the control panel, go to step 3A in the Diagnostics menu, set the *Disinfection Time* and select *Yes* to start the disinfection sequence. This cycle will ensure a final thorough rinsing of the evaporative module
- Once the rinse cycle is completed, the air system (central air or ventilation system) and the Evaporative Cooling Humidifier can be restarted in automatic mode.

Troubleshooting

Water leakage from the tank

- Check that the installation of the tank is level.
- Check for any damage or holes in the tank.
- Check for any damaged or ill-fitted drain pipe-work and ensure that there are no leaks.

Water carries over into air stream

- Check the air velocity at the inlet of the evaporation module. Make sure the value corresponds to initial design data. The limits of the air velocity for the evaporation medium are as follows.

Pressure	With Separator	Without Separator
Negative	14.7 ft/s (4.5 m/s)	11.8 ft/s (3.5 m/s)
Positive	14.7 ft/s (4.5 m/s)	9.8 ft/s (3.0 m/s)

- The air velocity might be uneven. Fit a perforated plate before the humidifier.
- Ensure that the humidifier media cassettes are correctly fitted and installed.
- Verify correct installation of the water distribution drawers.

Loss of performance

- The humidifier cassette is blocked or damaged. Check for the damaged media cassettes and replace, if required.
- Ensure that the humidifier media cassettes are correctly fitted and installed.
- There is not enough flow of water, check that the flow regulators are not blocked or that the hoses or pipe distribution in the upper trays are not blocked.

Scale build up on the surface of the media

- Excess concentration of minerals and salts in the tank. Check dilution cycle and increase the dilution.
- Water quality has changed.

Note: an accumulation of dust on the media may be caused by a failure of the air filtration.

Module pump is not functioning

- Check that the safety contacts are not open, and in particular the RG high limit switch.
- Check that there is a demand for cooling or moisture.
- Check that the Evaporative Cooling Humidifier is in automatic mode and in the ON position.
- Check that there are no alarms present and in particular a water level fault.
- Check that the water level in the tank is sufficient.

Exploded View and Parts List

Evaporative Cooling Humidifier

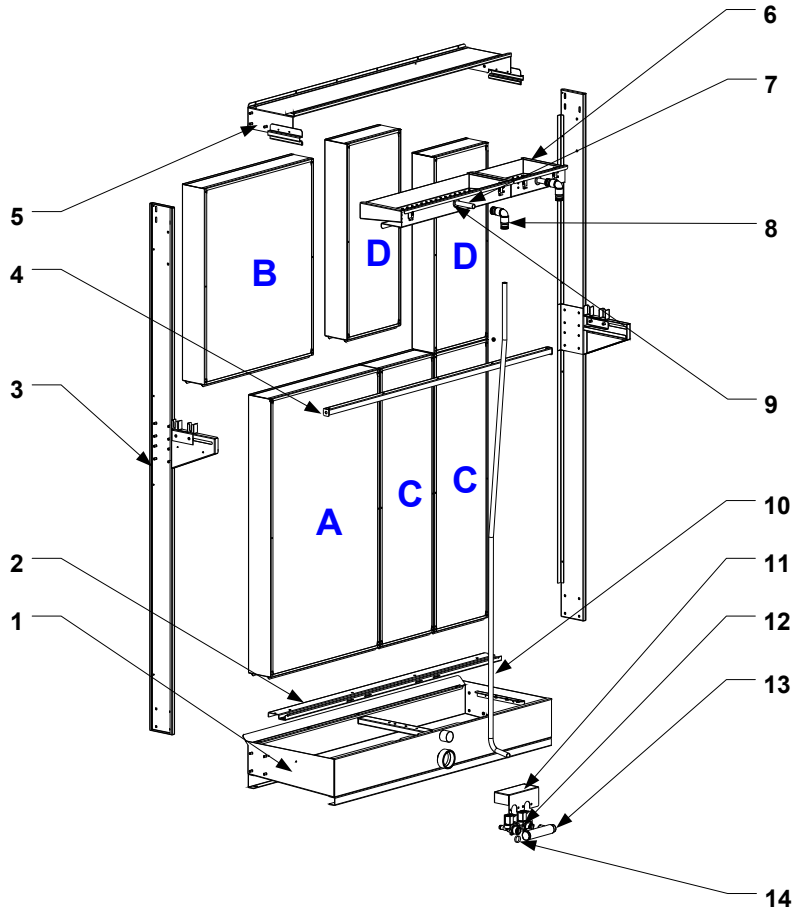

Illustration 12 - Evaporative Cooling Humidifier Exploded View

Table 10 - Evaporative Cooling Humidifier Part Numbers

Ref	Description	Part Number
1	Bottom tank	SW V7110-PN*
2	Support beam	SP V7115-PN*
3	Side frame	SW V7350PN*
4	Holding rail	SW V7200-PN*
5	Top frame	SW V7400-PN*
6	Water distribution drawer assembly - Column B	SW V77410B-PN*
7	Water distribution drawer assembly – Column A	SW V7410A-PN*
8	Quick connect 90deg for water hose	SW V7606
9	Rubber grommet	SP V2050
10	Water hose	SP V1610
11	Cover for stage valve	SP V1612
12	Solenoid valve	SP 6004
13	Water inlet manifold	SP V1603
14	Flow regulator	See flow regulator table

*Note: *PN refers to project number from Humidisoft and as indicated on the name plate of SKV humidifier.*

Media Panels

Table 11 - Media Panel Numbers

Ref	Description	Efficiency	Part number	
			Media only	Media + frame
A	Media panel bottom left	65%, 75mm depth	SP VM65A-PN*	SW VM65A-PN*
		75%, 100mm depth	SP VM75A-PN*	SW VM75A-PN*
		85%, 150mm depth	SP VM85A-PN*	SP VM85A-PN*
		95%, 200mm depth	SP VM95A-PN*	SW VM95A-PN*
B	Media panel top left	65%, 75mm depth	SP VM65B-PN*	SW VM65B-PN*
		75%, 100mm depth	SP VM75B-PN*	SW VM75B-PN*
		85%, 150mm depth	SP VM85B-PN*	SW VM85B-PN*
		95%, 200mm depth	SP VM95B-PN*	SW VM95B-PN*
C	Media panel bottom right	65%, 75mm depth	SP VM65C-PN*	SW VM65C-PN*
		75%, 100mm depth	SP VM75C-PN*	SW VM75C-PN*
		85%, 150mm depth	SP VM85C-PN*	SW VM85C-PN*
		95%, 200mm depth	SP VM95C-PN*	SW VM95C-PN*
D	Media panel top right	65%, 75mm depth	SP VM65D-PN*	SW VM65D-PN*
		75%, 100mm depth	SP VM75D-PN*	SW VM75D-PN*
		85%, 150mm depth	SP VM85D-PN*	SW VM85D-PN*
		95%, 200mm depth	SP VM95D-PN*	SW VM95D-PN*

*Note: *PN refers to project number from Humidisoft and as indicated on the name plate of SKV humidifier.*

Recommended Spares List

The following parts are recommended to be replaced as part of preventive maintenance program.

Table 12 - Spare Parts Replacement

Spare Part	Replacement Frequency
Water PP Pre-filter and Silver Ions Dosing	Based on water consumption and time in use, refer to step 3C “Service” in the Diagnostics menu (page 19)
Evaporative Media	Based on type of water used: - If operated with regular tap water, every 3 years or 2500 hours. - If operated with treated water, every 5 years or 5000 hours.

General Conditions of Sale and Warranty

General warranty policy

- Provided that the terms of payment are observed, the purchaser is offered a warranty of 24 months from the original purchase date of delivery for any Neptronic Humidifier SKV, SK300, SKR, SKE, SKS, SKSI and SKG Series, provided the equipment has been properly installed and operated in accordance with Neptronic instructions.

- The warranty covers faulty manufacture, design and/or defective materials and is limited to the equipment and components. The warranty shall cease to be valid in the event of misapplication, incorrect installation, improper maintenance or any other incorrect uses or misuse of the product.

- For the SK Series, the warranty furthermore ceases to be valid if the user disconnects or removes any electronic or mechanical components prior disconnecting the input power. Neptronic assumes no responsibility for repairs made on equipment, unless performed by Neptronic's authorized personnel.

- All defective product or component under warranty must have a valid Return Material Authorization (RMA) number issued prior to be processed. To request an RMA number, purchaser must provide the model number and serial number/date code of humidifier and certain components such as sensor and PC board etc.

- Neptronic agrees under the warranty to repair or replace (at the discretion of Neptronic) such standard products or components, which on examination by Neptronic are found to be defective.

- Product or component replaced or repaired under warranty will be sent back to the purchaser, standard ground freight paid by Neptronic

- Expenses in connection with travelling time, dismantling and mounting shall not be paid by Neptronic

- Guarantee for products or components sold but not manufactured by Neptronic, is only given to the same extent as given to Neptronic, however, not exceeding the normal Neptronic warranty.

- Parts used for repairs are warranted for the balance of the term of the warranty on the original humidifier or 90 days, whichever is longer.

- Any repairs made at the Neptronic facilities after the original warranty period are warranted for 1 month from the date of repair.

Special agreement on components under warranty

- For certain defected components under warranty, based on valid reasons, the purchaser has two options:

  1) Send back immediately the defective component(s) for inspection and the purchaser is responsible for freight to Neptronic. The full purchase price will be credited once the defective component(s) is received and the manufacturing defect is found upon inspection by Neptronic.
  OR
  2) Replacements will be sent without requiring returning of the defective component(s), standard ground freight paid by Neptronic at zero value invoice. Although the purchaser must hold defective component(s) for a period of 12 months whereas Neptronic reserves the right to claim the defective component(s) back for inspection at any time. If the claim is found to be out of warranty coverage upon inspection by Neptronic, the replacement parts sent free of charges will be then charged to the purchaser.

Notes

400 Lebeau blvd, Montreal, Qc, H4N 1R6, Canada
www.neptronic.com
Toll free in North America: 1-800-361-2308
Tel.: (514) 333-1433
Fax: (514) 333-3163
Customer service fax: (514) 333-1091
Monday to Friday: 8:00am to 5:00pm (Eastern time)